Tow-Trust Towbars

Important: Please read General Notes overleaf before fitting
Issue: 2

Fitting Instruction

TAD6VK Audi A6 (C8) 2018> A6 allroad (C8) 2019> A7 (F2) 2018>

Item	Qty	Description	Item	Qty	Description
A	1	TAD6 Crossmember	D	1	Flip Up Socket Plate (TTFP/RH)
B	2	Handed Side Arms	E	2	M12 x 60 Bolts & S/P Washers
C	1	6201 Detachable Neck	F	6	M12 x 40 (10.9) Bolts, 4 Nyloc Nuts & 2 S/P Washers
			G	2	M12 x 22 Bolt & S/P Washers
			H	2	M12 x 25 Bolts & S/P Washers
			J	4	12 x 30 Flat Washers
			K	12	12 x 25 Flat Washers
			M	4	100 x 2.5 Black Zip Ties
			N	1	M10 x 30mm Bolt & Nyloc Nut
			P	2	10 x 25 Flat Washer

Bumper Removal.

1. Remove rear light clusters by removing the black inner plastic trim to reveal two fixings per light cluster.
2. Remove three fixings from each wheel arch, peel back wheel arch liner to reveal one tip fixing either side. Remove six fixings along bumper lower edge.
3. Carefully release the bumper from the vehicle body and pull rearwards disconnecting any necessary wiring looms.
4. Remove the rear impact beam (this is not refitted with the Towbar assembly). Replace fixings into rear panel to prevent water ingress.
5. As per Fig 3 Use Item N with Items P to prevent water ingress. As per Fig 2 cut the heat shield, Note: Some models are pre-cut.

Towbar Installation.

1. Insert Items **B** into each correct chassis member and fix through the rearmost mounting point using Item **F** with Item **J**, fix at the forward mounting point using Item **E** with Item **J**.
2. Fix Item **A** between each side arm using Items **F** with Items **K**.
3. Fix Item **C** and Item **D** to Item **A** using Items **G** with Items **K** and Items **H** with Items **K**.
4. Fully tighten all fixings ensuring the Towbar is rigid, square and secure.
5. Cut the rear bumper as per Fig:1 Relocating the boot sensor cable when applicable and refit. NOTE: Some models are pre-cut.

Fig:1
Bumper Cut Inside View

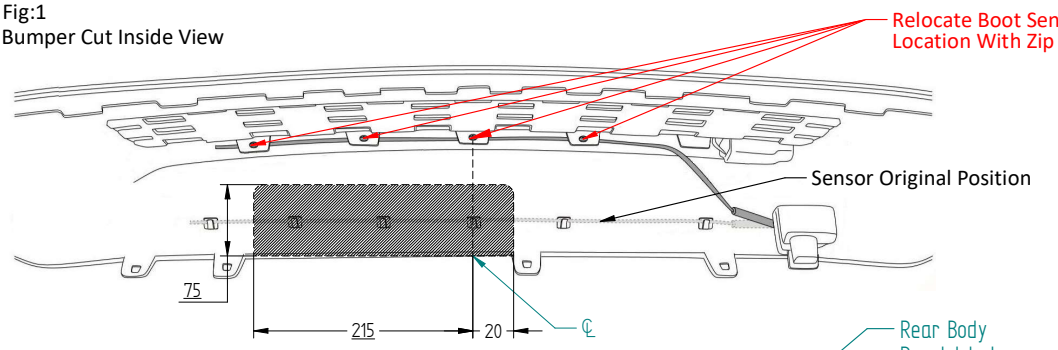

Fig:3

Fig:2

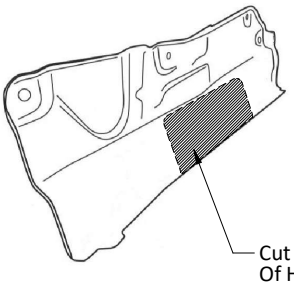

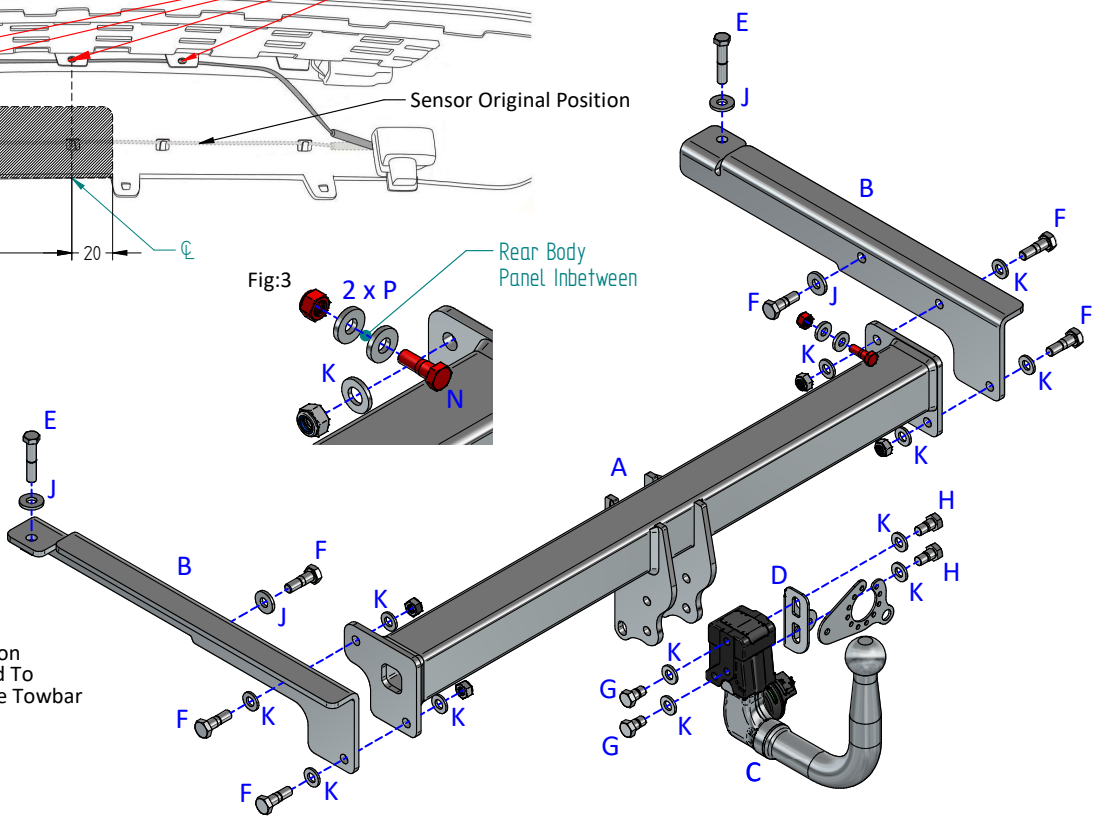

Notes:

1. For Torque settings see general notes overleaf.
2. Nose load limits and vehicle manufacturer's trailer / caravan weight limits must be observed.