# Tow-Trust Towbars

Important: Please read General Notes overleaf before fitting
Issue: 1

Fitting Instruction

**TALKO6 Vehicles Built From AL-KO 1290mm to 1322mm Wide Chassis 2006>**
**Bailey Approach Motorhomes 2012>**

| Item | Qty | Description | Item | Qty | Description |
|---|---|---|---|---|---|
| A | 1 | TALKO6 Crossbar 1290mm | F | 2 | M16 X 60 Bolts & Nyloc Nuts |
| B | 2 | Side Arms | G | 4 | M12 x 40 (10.9) Bolts & Nyloc Nuts |
| C | 1 | Rear C-Section | H | 4 | M14 x 45 Bolts & S/P Washers |
| D | 1 | Flange Assembly | J | 4 | M14 x 140 Bolts & Nyloc Nuts |
| E | 4 | Spacer Plates | K | 4 | 12 x 25 Flat Washers |
| | | | L | 4 | 12 x 40 Flat Washers |
| | | | M | 12 | 14 x 27 Flat Washers |
| | | | P | 12 | M14 Bolt Caps |

**Notes:**

1. **Ensure the type approval label is in the position shown below when installing this product.**
2. **Before installation always establish the correct chassis width and spacer requirements.**
3. **Bailey Approach Motorhomes will require the slots removing from the rear panel to access the chassis.**

**Towbar Installation:**

1. Locate the rear mounting points and loosely attach items **B** to the chassis each side using items **G** with items **K** and items **L**.
2. Loosely attach item **A** to items **B (plus items E when required)** using items **H** with items **M**.
3. Loosely attach items **C** and **D** to item **A** using items **J** with items **M**.
4. Using Items **F** secure your desired ball bracket and wiring plate (Not supplied in this kit) to Item **D**.
5. Fully tighten all the fixings ensuring the Towbar is ridged, square and secure.
6. Attach items **P** to items **H** and items **J**.

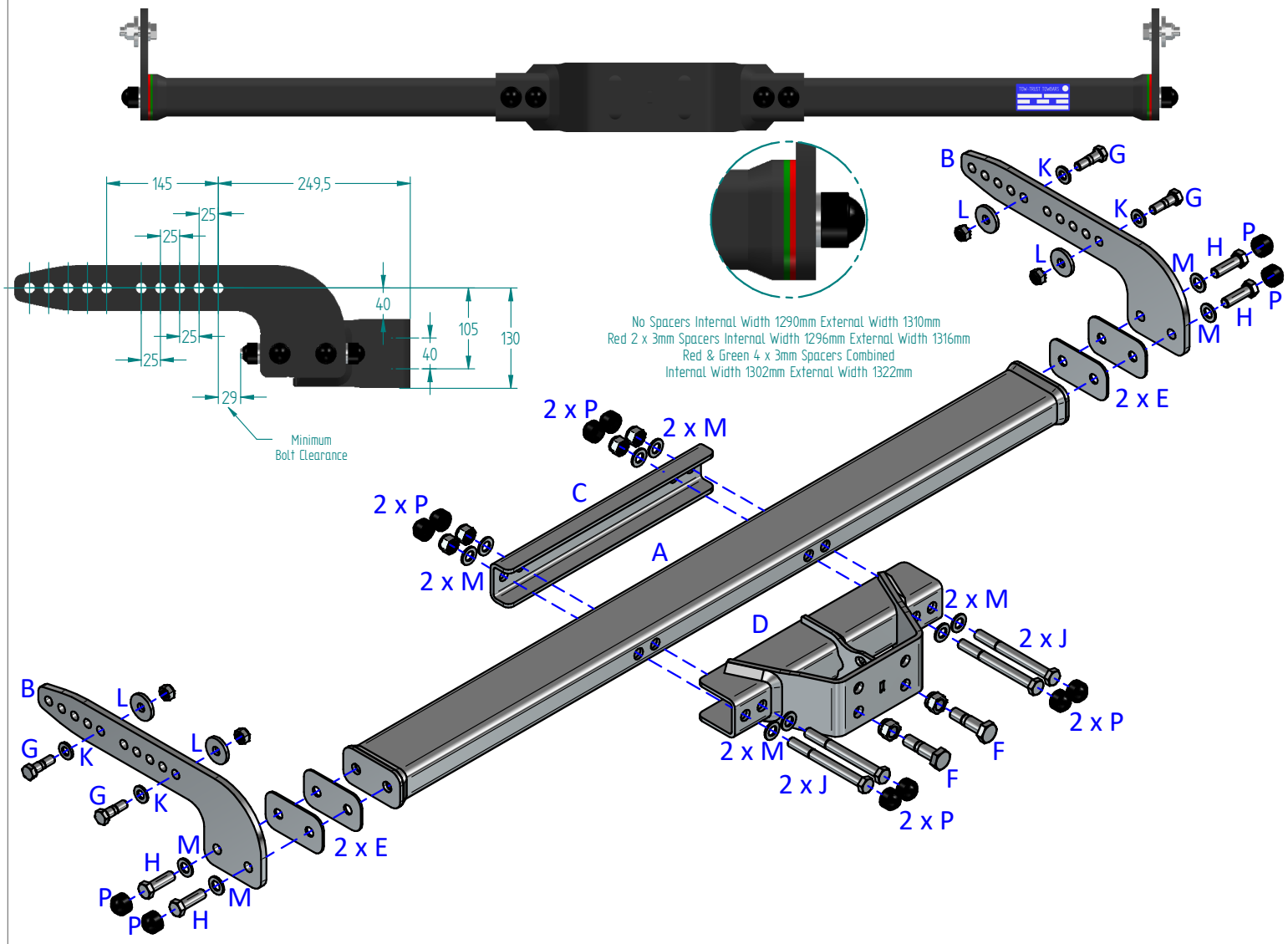


**Notes:**

1. For Torque settings see general notes overleaf.
2. Nose load limits and vehicle manufacturer's trailer / caravan weight limits must be observed.
3. We recommend the use of PRO-TOW Couplings with all our products.